DRC
PZ25-12000015
05/05/2025

IRRIGATION NOTES:

1. Irrigation system design requirements: 20 GPM minimum @ 40 PSI minimum at the point of connection. The Irrigation Contractor shall verify the available GPM and PSI prior to installation of the system.
Point of connection shall be to the potable water service line.

2. Do not willfully install the irrigation system as shown on the drawings when it is obvious in the field that conditions exist that might not have been considered in the design process. For example : obstructions, grade differences, water levels, dimensional differences, etc. Refer to the Landscape Plan to avoid conflicts with proposed trees or shrubs.

3. Piping may sometimes be indicated as being located in unlikely areas: i.e., under buildings or pavement, outside of property lines, in lakes or ditches, etc. This is done for graphic clarity only. Whenever possible, piping is to be installed in open, "green" areas.

4. Contractor shall verify all underground utilities prior to commencement of work. The contractor is advised that city underground utilities are present in the work area. Contractor shall secure locates from utilities prior to any excavation. use permits.

5. Contractor shall install pop-up sprinklers 6" from edge of sidewalk, 12" from walls and edge of road or parking area. Install shrub risers 18" from sidewalk, walls and edge of road or parking area.

6. Irrigation system design is diagrammatic to improve clarity. All mainline piping, electric valves and wiring are to be installed in landscape areas and within Right of Way boundaries.

7. If required, the Irrigation Contractor shall provide the necessary "Right of Way"

8. Install bubblers on all large trees and palms.

9. Size all pipe to insure flow velocity is under 5 feet per second.

10. Pipe sizes shall conform to those on the drawings. Substituting with smaller pipe sizes will not be permitted.

11. Mainline shall be installed with a minimum of 24" depth of cover.
Lateral lines shall be installed with a minimum of 12" depth of cover.

12. Wherever practical, install valves in mulched beds and/or out of high traffic areas. All valves and wire splices shall be installed in heavy duty plastic valves boxes with covers that read irrigation and be sized as follows:

Remote Control Valves: standard 12" deep rectangle valve box
Drip Zone Control Kits: jumbo 15" deep rectangle valve box
Isolation Gate Valves: standard 12" deep rectangle valve box
Wire Splices: standard 12" deep rectangle valve box

13. Refer to Valve Designation Symbols for valve size, station number and designed flow rate for each remote control valve.

14. All 24 volt control cable to be UL Listed, single strand, type UF 600 Volt control cable. Size and color as follows:

Common Wires - size AWG #14 and WHITE in color.
Hot Wires - size AWG #14 and RED in color.
Spare Wires - size AWG #14 and BLUE in color.

15. All splices to the 24 volt control wiring shall be made with DBY or equal type connectors.

21. The final location of all components shall be approved by the project engineer and/or owner.

16. Run one (2) spare wires from controller in each direction of the mainline to furthest valves.

17. All pop-up sprinkler heads shall be installed level and flush to grade.

18. Provide and install rain sensor where it will be exposed to unobstructed sun/rainfall and connect to irrigation controller.

19. All sleeves shall be 2 nominal pipe sizes larger than the size of the pipe to be accommodated. All pipe crossings over 5 feet in length shall be installed inside PVC pipe sleeving.

20. Any other equipment required that is not other wise detailed or specified shall be installed as per manufacturer's recommendations and specifications.

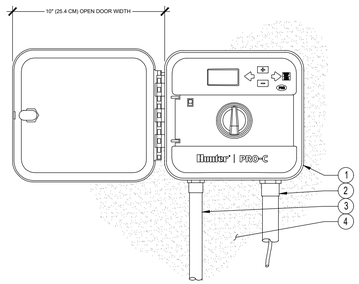

LEGEND:
1. IRRIGATION CONTROLLER (PRO-C) PER PLAN
2. IRRIGATION CONTROL WIRE IN CONDUIT SIZE AND TYPE PER LOCAL CODES
3. ELECTRICAL SUPPLY CONDUIT CONNECT TO POWER SOURCE, J-BOX INSIDE CONTROLLER
4. ADJACENT SURFACE TO MOUNT CONTROLLER PER PLAN

NOTE
MOUNT CONTROLLER LCD SCREEN AT EYE LEVEL, CONTROLLER SHALL BE HARD-WIRED TO GROUNDED 110 VAC POWER SOURCE

CONTROLLER DETAIL

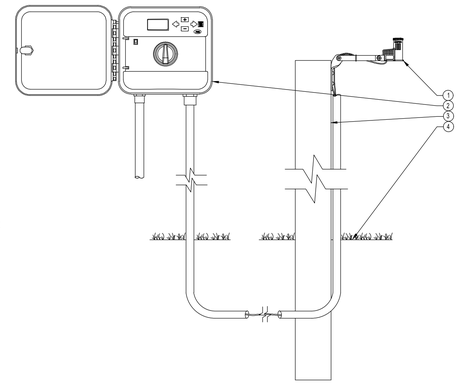

LEGEND:
1. RAIN-CLIK SENSOR
2. WALL MOUNT CONTROLLER
3. POST OR SUITABLE MOUNTING SURFACE
4. FINISHED GRADE

RAIN SENSOR DETAIL

LEGEND
1. HUNTER REMOTE CONTROL VALVE (ICZ) WITH FILTER REGULATOR
2. IRRIGATION VALVE BOX: HEAT STAMP LID WITH "RCV" IN 2" LETTERS
3. WATERPROOF CONNECTORS (2)
4. 18"–24" COILED WIRE TO CONTROLLER
5. FINISH GRADE AT ADJACENT SURFACE (TURF OR MULCH)
6. SCH. 80 CLOSE NIPPLE, MATCH SIZE TO VALVE
7. VALVE
8. ISOLATION VALVE, SIZE AND TYPE PER PLAN
9. PVC SLIP X MPT ADAPTOR
10. BRICK SUPPORTS (4)
FILTER FABRIC – WRAP TWICE AROUND BRICK SUPPORTS
11. 3/4" WASHED GRAVEL – 4" MIN. DEPTH
12. IRRIGATION LATERAL
13. MAINLINE LATERAL AND FITTINGS

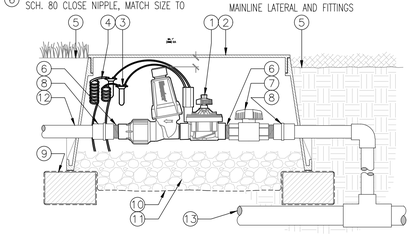

DRIP VALVE DETAIL

LEGEND
1. HUNTER REMOTE CONTROL VALVE (PGV)
2. IRRIGATION VALVE BOX: HEAT STAMP LID WITH "RCV" IN 2" LETTERS
3. WATERPROOF CONNECTORS (2)
4. 18"–24" COILED WIRE TO CONTROLLER
5. FINISH GRADE AT ADJACENT SURFACE (TURF OR MULCH)
6. SCH. 80 CLOSE NIPPLE, MATCH SIZE TO VALVE
7. PVC SLIP X FPT ADAPTOR
8. BRICK SUPPORTS (4)
9. FILTER FABRIC – WRAP TWICE AROUND BRICK SUPPORTS
10. 3/4" WASHED GRAVEL – 4" MIN. DEPTH
11. IRRIGATION LATERAL
12. MAINLINE AND FITTINGS

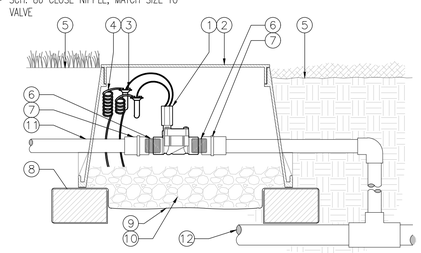

VALVE DETAIL

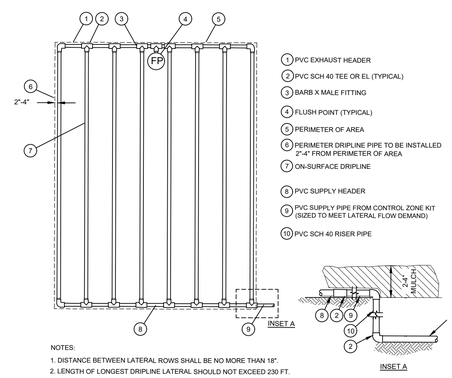

1. PVC EXHAUST HEADER
2. PVC SCH 40 TEE OR EL (TYPICAL)
3. BARB X MALE FITTING
4. FLUSH POINT (TYPICAL)
5. PERIMETER OF AREA
6. PERIMETER DRIPLINE PIPE TO BE INSTALLED 2"-4" FROM PERIMETER OF AREA
7. ON-SURFACE DRIPLINE
8. PVC SUPPLY HEADER
9. PVC SUPPLY PIPE FROM CONTROL ZONE KIT (SIZED TO MEET LATERAL FLOW DEMAND)
10. PVC SCH 40 RISER PIPE

NOTES:
1. DISTANCE BETWEEN LATERAL ROWS SHALL BE NO MORE THAN 18".
2. LENGTH OF LONGEST DRIPLINE LATERAL SHOULD NOT EXCEED 230 FT.

ON-SURFACE DRIPLINE/END FEED LAYOUT

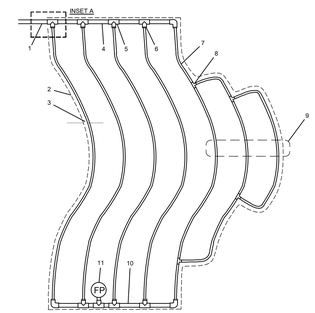

1. PVC SUPPLY PIPE FROM CONTROL ZONE KIT (SIZED TO MEET LATERAL FLOW DEMAND)
2. PERIMETER OF AREA
3. PERIMETER DRIPLINE PIPE TO BE INSTALLED 2"-4" FROM PERIMETER OF AREA
4. PVC SUPPLY MANIFOLD
5. PVC SCH 40 TEE OR EL (TYPICAL)
6. BARB X MALE FITTING:
7. ON-SURFACE DRIPLINE:
8. BARB X BARB INSERT TEE:
9. TOTAL LENGTH OF SELECTED DRIPLINE SHOULD NOT EXCEED LENGTH AS NOTED:
10. PVC FLUSH HEADER
11. FLUSH POINT
12. PVC RISER PIPE
13. 2"-4" DEPTH OF MULCH
14. FINISH GRADE

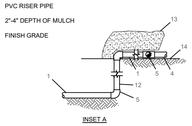

NOTES:
1. DISTANCE BETWEEN LATERAL ROWS SHALL BE NO MORE THAN 18".
2. LENGTH OF LONGEST DRIPLINE LATERAL SHOULD NOT EXCEED 230 FT.

ON-SURFACE DRIPLINE / TYPICAL ODD CURVES LAYOUT

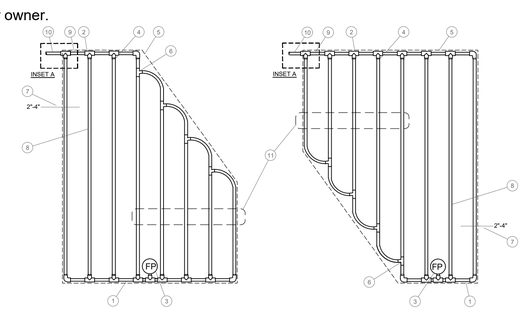

1. PVC EXHAUST HEADER
2. PVC SCH 40 TEE OR EL (TYPICAL)
3. FLUSH POINT (TYPICAL)
4. BARB X MALE FITTING:
5. PERIMETER OF AREA
6. BARB X BARB INSERT TEE OR CROSS:
7. PERIMETER DRIPLINE PIPE TO BE INSTALLED 2"-4" FROM PERIMETER OF AREA
8. ON-SURFACE DRIPLINE:
9. PVC SUPPLY MANIFOLD
10. PVC SUPPLY PIPE FROM RAINBIRD CONTROL ZONE KIT (SIZED TO MEET LATERAL FLOW DEMAND)
11. TOTAL LENGTH OF SELECTED DRIPLINE SHOULD NOT EXCEED LENGTH AS NOTED.
12. PVC SCH 40 RISER PIPE

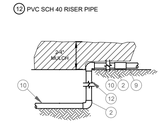

NOTES:
1. DISTANCE BETWEEN LATERAL ROWS SHALL BE NO MORE THAN 18".
2. LENGTH OF LONGEST DRIPLINE LATERAL SHOULD NOT EXCEED 230 FT.

ON-SURFACE DRIPLINE / TYPICAL IRREGULAR SHAPED LAYOUT

DRIP DETAILS

LEGEND
1. HUNTER POP-UP BODY PROS-04: WITH BUBBLER NOZZLE PER PLAN
2. FINISHED GRADE
3. ADJACENT LANDSCAPE
4. LATERAL PIPE PER PLAN
5. LATERAL FITTING PER PLAN
6. FIELD BUILT SWING ARM WITH (FLEXSG) TUBING AND SPIRAL BARB ELBOWS (HSBE)

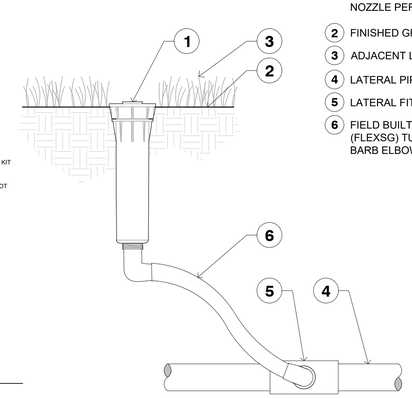

PROS-4/BUBBLER DETAIL

LEGEND
1. HUNTER POP-UP BODY (PROS-06), NOZZLE AND CAP PER PLAN
2. FINISHED GRADE
3. ADJACENT LANDSCAPE
4. LATERAL PIPE PER PLAN
5. LATERAL FITTING PER PLAN
6. FIELD-BUILT FLEXIBLE SWING ARM

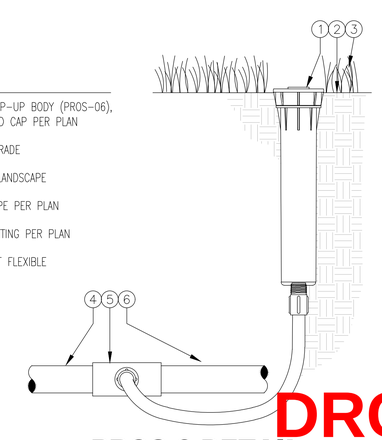

PROS-6 DETAIL

Paul A. Goulas
Digitally signed by Paul A. Goulas
DN: E=paul@las-fl.com, CN=Paul A. Goulas, O="LANDSCAPE ARCHITECTURAL SERVICES, LLC", SERIALNUMBER=AATL20250117384016, L=Port Saint Lucie, S=Florida, C=US
Date: 2025.07.08 10:08:30-04'00'

Know what's below. Call before you dig.

DRC
PZ25-12000015
08/06/2025

DRC
PZ25-12000015
05/20/2026

Project Team

Landscape Architect:

LANDSCAPE ARCHITECTURAL SERVICES, LLC
Brandon White | Owner
772-834-1357 | brandon@las-fl.com
Paul Goulas | Owner
772-381-8400 | paul@las-fl.com
1708 SE Joy Haven Street
Port St. Lucie, Fl. 34983

Architect:

RAMOS ARCHITECTS & ASSOC.
780 Tamiami Canal Road
Miami, FL 33144
(305) 506-7388

Proposed Building Addition & Parking For:
50 S.W. 5th Street Pompano Beach, FL 33060
Irrigation Details & Specifications

Revisions

Date	Init.	Description
07.07.25	PG	Initial Submittal

REGISTERED LANDSCAPE ARCHITECT
PAUL A. GOULAS
LA 6666807
STATE OF FLORIDA

PAUL GOULAS, RLA
FLORIDA REG. # LA6666807

Drawn By:	PG
Checked By:	PG
Municipal Project:	
Scale:	

IR-02